Nooteboom EURO-38-02 | 2-AXLES | HYDR STEER / SUSP | 4.25 M EXTENSION

COMMON

ID	114510
Make	Nooteboom
Construction	Low loader

PROPERTIES

Year	2004
First registration date	27-07-2004
Weight	12.880 kg
Load capacity	25.120 kg
Gross weight	38.000 kg
Length	1.747 cm
Width	252 cm



Nooteboom EURO-38-02 | 2-AXLES | HYDR STEER / SUSP |...

Referentienummer: 114510

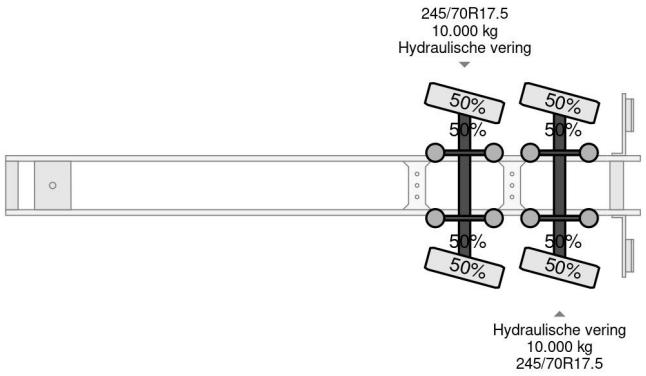

ACCESSORIES

• Extra steering axle

DESCRIPTION

For sale:

Make and model: Nooteboom EURO-38-02
First registration: 27-07-2004
VIN: XMREURO00040000420
Construction: Low bed trailer
GVW: 38.000 kg
Empty weight: 12.880 kg
Loading capacity: 25.120 kg

Dimensions:
Length: 13.22 m
Width: 2.52 m
Width extension: 3.00 m
Length extension: 4.25 m
Total length with extension: 1...

D.P.A. Weeversstraat 2, 8316 GG Marknesse
Tel.: +31 527 24 61 40
Email: info@hulleman.com