Nooteboom EURO-38-02 | 2-AXLES | HYDR STEER / SUSP | 4.25 M EXTENSION

COMMON

ID	114510
Marque	Nooteboom
Chassis	Surbaissé

PROPERTIES

Année de construction	2004
Date première immatriculation	27-07-2004
Poids à vide	12.880 kg
Poids de la charge	25.120 kg
Poids maximum	38.000 kg
Longueur	1.747 cm
Largeur	252 cm



Nooteboom EURO-38-02 | 2-AXLES | HYDR STEER / SUSP |...

Referentienummer: 114510

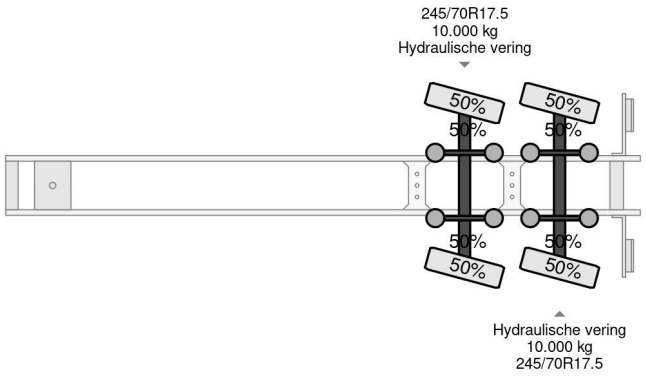

ACCESSOIRES

DESCRIPTION

For sale:

Make and model: Nooteboom EURO-38-02
First registration: 27-07-2004
VIN: XMREURO00040000420
Construction: Low bed trailer
GVW: 38.000 kg
Empty weight: 12.880 kg
Loading capacity: 25.120 kg

Dimensions:
Length: 13.22 m
Width: 2.52 m
Width extension: 3.00 m
Length extension: 4.25 m
Total length with extension: 17.47 m
Neck: 3.7 m
Bed: 6.5 m
Floor height over wheels: 9.05 m

Suspension | Weights | Tyres:

2nd Axle: Hydraulic | 10.000 kg | 245/70R17.5 50%

General specifications:
Hydraulic steering
Remote control steering
Central lubrication
4.25-meter Extension
Brand axles: BPW
Power pack for hydraulics
ABS
LED working lights
NATO connector
Extendable sides

Of course, we have more pictures and information available, and we are looking forward to helping you.

Worldwide delivery is possible!

For more information, please contact our sales department:

D.P.A. Weeversstraat 2, 8316 GG Marknesse
Tel.: +31 527 24 61 40
Email: info@hulleman.com